APS Engineering the future

PRODUCT SPOTLIGHT

HSP2208 -2128
LINER LESS version

Technical manual

Preface

- This manual provides complete technical information about **HSP2208 and 2128** thermal printer mechanisms **LINER LESS version**.
- For customized printers, **A.P.S.** supplies documentation in addition to the present specification.
- The present specification is valid also for customized types, where the different condition has not effects for common data (eg. different length of elec. cables).
- More information is available upon request such as high speed printing applications and reliability figures.

- **A.P.S.** reserves the right to make changes to the product, without notice, to improve reliability, functions or design.

- **A.P.S.** does not assume any liability arising out of the application or use of the product or circuits described within.

- The warranty terms of the product are described in a separate document, ask **A.P.S.** to obtain this document.

Revision history

Rev. Index	Date	Description	Author
Pre	08-Feb-17	Issued Preliminary document	P.S.
Prel 1	08-Jan-23	Add printer reference with NCOB	P.S.

TABLE OF CONTENTS

Sec. **Page**

1. INTRODUCTION 3
1.1. HSP 2208 / 2128- LL FEATURES 3

2. GENERAL CHARACTERISTICS 4

3. THERMAL HEAD AND PRINTING CONFIGURATION 6
3.1. OUTLINES 6
3.2. THERMAL HEAD ELECTRICAL CHARACTERISTICS – HSP2208 6
3.3. THERMAL HEAD ELECTRICAL CHARACTERISTICS – HSP2128 7
3.4. TIMING CHART 7
3.5. MAXIMUM CONDITIONS AT 25°C 9
3.6. TYPICAL PRINTING CONDITIONS 10
3.7. HEATING TIME CALCULATION 11
3.8. THERMISTOR 11
3.9. PRINT POSITION OF THE DATA 12
3.10. OPERATING PRECAUTIONS 12

4. PAPER FEED STEPPER MOTOR TIMING 13

5. INTEGRATED CUTTER 14
5.1. CUTTER STEPPER MOTOR 14
5.2. BLADE POSITION SENSOR 15
5.3. CUTTER RESET 16
5.4. PAPER JAM DETECTION 17
5.5. CUT SEQUENCE 18
5.6. RECOMMENDED SPEED PROFILES 19

6. SENSORS 23
6.1. DOOR OPEN 23
6.2. END OF PAPER 23

7. MECHANISM INTERCONNECTION 25
7.1. PIN OUT ASSIGNMENT 25
7.2. RECOMMENDED FFC DIMENSIONS 26

8. OPTIONAL DRIVER BOARD 27
8.1. GENERAL FEATURES 27
8.2. CONTROL BOARD INTERFACES 27
8.3. CONTROL BOARD PRINTING ENGINE 27

9. MECHANICAL & HOUSING 28
9.1. KIOSK VERSION AND EASY LOADING VERSION 28
9.2. DESIGNING THE DOOR 28
9.3. THE EASY DOOR OPENING SYSTEM 28
9.4. OVERALL DIMENSIONS AND FIXING POINTS 29

10. General Cleaning 29
10.1. CLEANING INSTRUCTIONS: 29

11. ORDERING CODE 29

12. APPLICATION NOTES 31
12.1. EXAMPLE OF INTEGRATION 31
12.2. EASY LOADING MODULE 32

1. INTRODUCTION

The **HSP** (High Speed Printer) **2208 or 2128 - LL** printer has been designed to be the most powerful easy loading printer with cutter of the market to be used especially with **Liner Less paper**. Its really compact dimensions associated with the unique APS easy loading concept make the integration very simple. The Kiosk version turns **HSP 2208 / 2128** into an easy cleaning ATM/Kiosk printer.

1.1 HSP 2208 / 2128- LL Features

- Full easy loading (roll and cutter), patented
- Ultra compact design (width is 95 mm, height is 30 mm, length is 74 mm)
- Up to 250 mm/s printing speed (10 ips)
- Cuts paper up to 220 µm (10 mils) in less than 1.2s (80 µm in less than 0.6s)
- 24V operation **(2208)** or 12V operation **(2128)**
- High resolution printing (8 dots/mm)
- Heavy duty mechanism: 200 km, 2 million cuts (std paper thickness 63 µm and 190 µm)
  100 km, 100 k cuts (without maintenance) with Liner Less paper
- Low noise due to its technology (thermal)

2. GENERAL CHARACTERISTICS

Item	Specification	
Printing Method	Thermal dot line printing	
Number of dots/line	448	
Main scanning density (dot/mm)	8	
Subsequent scanning density (line/mm)	8	
Printing Width (mm)	56 mm	
Paper Width (mm)	60 to 62.5 mm	
Paper feed pitch (mm) Printing pitch (mm)	0.125 mm (1 step per dotline) 0.125 mm (1 step per dotline)	
Dimension W x D x H (mm)	95 x 74 x 30	
Weight (g)	250	
Head temperature detection	Thermistor	
Head-up detection	Mechanical switch	
Paper end detection	Opto sensor	
Operating voltage range	**2208:** **Logic**: 3.0 to 5.5 V; **24 V** typical **2128:** **Logic**: 3.0 to 5.5 V; **12 V** typical	
Current consumption	Printing: (24V, 320 dots)	11.2 A max. (TPH power) 70 mA max. (Logic)
	Paper feeding: (max. speed)	450 mA (per phase / HSP2208) 800 mA (per phase / HSP2128)
	Cutting	1.4 A (per phase / HSP2208) 1.3 A (per phase / HSP2128)
Recommended Paper Equivalent types can be used	**Thin paper** JUJO-AF50KS-E (standard grade) JUJO-AF50KS-E3 (high sensitivity) KANZAN-KPW460/490 Mitsubishi-T8051/T8067 **Liner less paper :** Blumberg paper : 5P26 15g/m2	**Thick paper** AP 15KT-M AP 15KJ-R KPW412/415 T1433
Operating temperature range (°C)	-20 °C to +70 °C *	
Operating humidity (RH %)	10 % - 90 % (no condensation)	
Storage temperature range (°C)	-40 °C / +80 °C	
Storage humidity (RH %)	5 % - 90 % (no condensation)	

*(beyond the range from -5 to +50 °C, printed optical density and print head life may be affected)

Printer life	Durability	Basic conditions	Maximum variations
Thermal head pulse resistance	100 million pulses	- Room temp.: 20 ~ 25 °C - Head temp.: 65 °C max. - Rated energy	Max. 15 % in resistance value (Ω) of any dot, from its initial value
Abrasion/wear resistance	100 km of paper*		
Cutter life	100 K cuts*		

*with liner less paper, without external maintenance

3. THERMAL HEAD AND PRINTING CONFIGURATION

3.1 Outlines

Heat element structure	1 heaters/dot
Number of heat elements	448 dots
Heat element pitch	0.125 mm (8.0 dots/mm)
Print width	56 mm ± 0.2 mm (centred on paper)
Average resistance	650 Ω ± 3 % **(HSP2208)**
	300 Ω ± 3 % **(HSP2128)**

3.2 Thermal head electrical characteristics – HSP2208

Print head logic can be powered from either 5 V or 3.3 V supply.

Item	Symbol	Min.	Typ.	Max.	Unit
Printing voltage **HSP2208**	VH	-	**24**	**26.4**	V
Logic voltage	Vdd	3	-	5.5	V
Logic current (fCLK = 16MHz)	Idd	-	-	56	mA
Input voltage (High)	V_{IH}	0.8xVdd	-	Vdd	V
Input voltage (Low)	V_{IL}	0	-	0.2xVdd	V
Data input current (DI) High	I_{IH} DI	-	-	0.5	µA
Data input current (DI) Low	I_{IL} DI	-0.5	-	-	µA
STB input current (High)	I_{IH} STB	-	-	180	µA
STB input current (Low)	I_{IL} STB	-2	-	-	µA
Clock input current (High)	I_{IH} CLK	-	-	3.5	µA
Clock input current (Low)	I_{IL} CLK	-3.5	-	-	µA
Latch input current (High)	I_{IH} LAT	-	-	3.5	µA
Latch input current (Low)	I_{IL} LAT	-3.5	-	-	µA
Clock frequency	f CLK (5V) (3.3V)	- -	- -	16 10	MHz
Clock width	tw CLK	20	-	-	ns
Data setup time	tsetup DI	15	-	-	ns
Data hold time	thold DI	15	-	-	ns
Latch width	tw LAT	40	-	-	ns
Latch setup time	tsetup LAT	60	-	-	ns
STB setup time	tsetup STB	300	-	-	ns
Driver out delay time	tdo	-	-	30	µs

3.3 THERMAL HEAD ELECTRICAL CHARACTERISTICS – HSP2128

Print head logic can be powered from either 5 V or 3.3 V supply.

Item	Symbol	Min.	Typ.	Max.	Unit
Printing voltage **HSP2128**	VH	-	**12**	**16**	V
Logic voltage	Vdd	3	-	5.5	V
Logic current (fCLK = 30MHz)	Idd	-	-	70	mA
Input voltage (High)	V_{IH}	0.8xVdd	-	Vdd	V
Input voltage (Low)	V_{IL}	0	-	0.2xVdd	V
Data input current (DI) High	I_{IH} DI	-	-	2	µA
Data input current (DI) Low	I_{IL} DI	-2	-	-	µA
STB input current (High)	I_{IH} STB	-	-	240	µA
STB input current (Low)	I_{IL} STB	-4	-	-	µA
Clock input current (High)	I_{IH} CLK	-	-	7	µA
Clock input current (Low)	I_{IL} CLK	-7	-	-	µA
Latch input current (High)	I_{IH} LAT	-	-	7	µA
Latch input current (Low)	I_{IL} LAT	-420	-	-	µA
Clock frequency	f CLK	-	-	30	MHz
Clock width	tw CLK	14	-	-	ns
Data setup time	tsetup DI	8	-	-	ns
Data hold time	thold DI	8	-	-	ns
Latch width	tw LAT	100	-	-	ns
Latch setup time	tsetup LAT	20	-	-	ns
STB setup time	tsetup STB	100	-	-	ns
Driver out delay time	tdo	-	-	15	µs

STROBE includes pull-down resistance of 75K Ω ±50%.

3.4 Timing chart

The following chart gives the timing for driving the print-head:

tw CLK

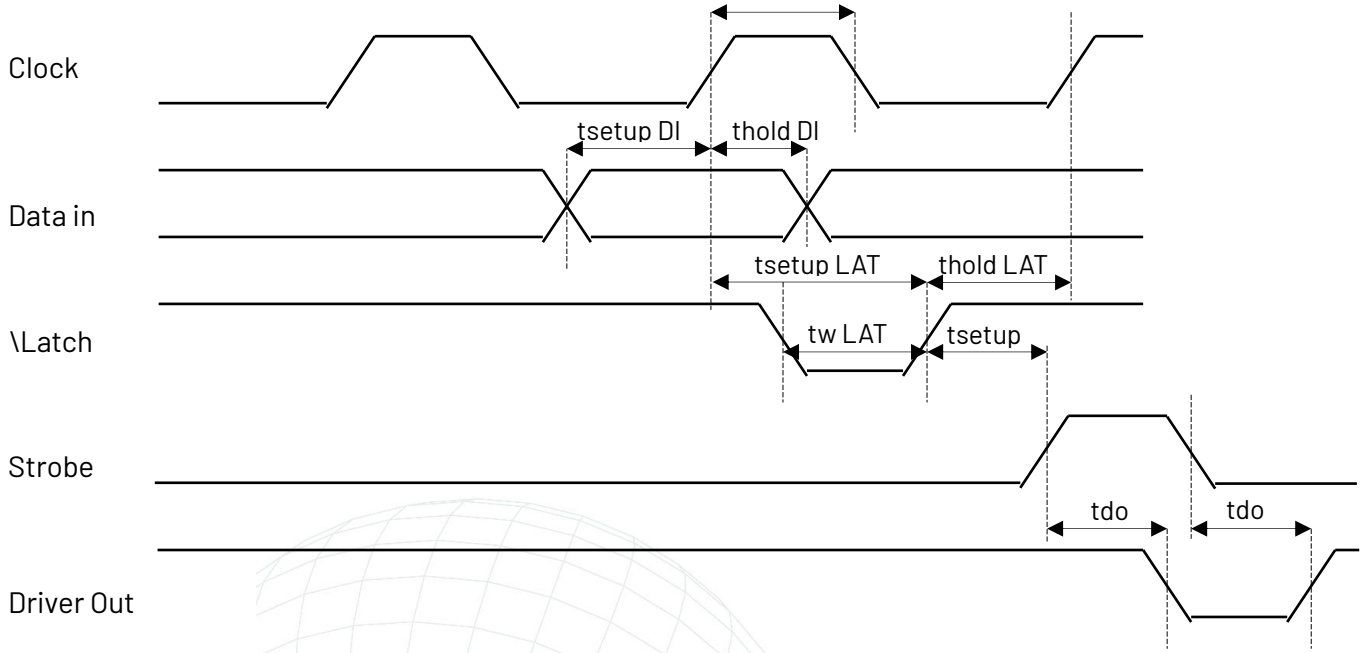

Latch signal is **active low**.
Strobe signal is **active high**.

3.5 MAXIMUM CONDITIONS AT 25°C

HSP2208

Item	Maximum conditions	Unit
Printing cycle	0.82	ms/line
Supply energy (at specified print cycle)	0.21	mJ/dot
Supply voltage	26.4	V (Vp<28V)
Head temperature	65	°C
Number of dots to be energized simultaneously	320	dots
Logic supply voltage	7	V
Logic input voltage	0 ~ V_{DD} + 0.5	V

HSP2128

Item	Maximum conditions	Unit
Printing cycle	1,25	ms/line
Supply energy (at specified print cycle)	0.41	mJ/dot
Supply voltage	16	V
Head temperature	65	°C
Number of dots to be energized simultaneously	320	dots
Logic supply voltage	5.5	V
Logic input voltage	0 ~ V_{DD} + 0.3	V

Notes:

- If energy above maximum ratings is applied to one dot, the print quality of this dot may be affected (usually by resulting in a "light" print-out).
- If the print cycle is less than the one indicated above, then the maximum supply energy value should be decreased. For these applications, please contact APS for further information.
- When using low energy paper, please contact A.P.S. for more information.

3.6 TYPICAL PRINTING CONDITIONS

HSP2208

Item	Symbol	Electrical conditions	Unit	Conditions
Power consumption	P_0	0.81	W/dot	R_{ave} = 650 Ω 448 dots ON
Supply voltage	V_H	24.0	V	
Print cycle	S.L.T.	0.82	ms/line	
Energy consumption (On Time)	E_0 (T_{on})	0.19 (0.24) 0.18 (0.22) 0.17 (0.21)	mJ/dot ms mJ/dot ms mJ/dot ms	5 °C 25 °C 40 °C
Supply current	I_0	31.9	mA/dot	R_{ave} = 650 Ω

HSP2128

Item	Symbol	Electrical conditions	Unit	Conditions
Power consumption	P_0	0.38	W/dot	R_{ave} = 300 Ω
Supply voltage	V_H	12.0	V	
Printing cycle	S.L.T.	1.25	ms/line	
Energy consumption (On Time)	E_0 (T_{on})	0.18 (0.47) 0.16 (0.42) 0.14 (0.37)	mJ/dot ms mJ/dot ms/line mJ/dot ms	5 °C 25 °C 40 °C
Supply current	I_0	35,5	mA/dot	R_{ave} = 300 Ω

The print optical density is then 1.0 minimum with a maximum variation of 0.3. This measurement is done at the full black pattern by Macbeth densitometer RD-914. Full black pattern is defined as all dots printing pattern (100% black area) printed under correct paper speed.

3.7 HEATING TIME CALCULATION

The following formula allows calculating the heating time T_{on} depending on driving voltage VH:

$$E_o = I_0^2 \overline{R} t_s = \frac{(VH - V_{com})^2 * \overline{R} * t_s}{(\overline{R} + R_{ic})^2}$$

Where:

t_s is Strobe pulse width
V_H is head voltage
R is heater average resistance
R_{ic} is Driver IC"ON" resistance (24 Ω)
V_{com} =0.5V

t_s should be compensated for printing speed (a derating factor should be applied depending on printing speed). Please contact A.P.S. for details.

3.8 THERMISTOR

When performing continuous printing, it is recommended that the supply energy be reduced so that the substrate temperature monitored through the thermistor will remain below 70°C.

The thermistor specification is the following:

- R25, resistance at 25°C: 30 KΩ +/- 5%
- B value: 3950 K+/- 2%
- Operating temperature: -20°C to +80°C
- Time constant: Max.30 s (in the air)

Then the resistance value R versus temperature T (in °C) is given by the formula:

$$R_{(T)} = R_{25} * e^{B*\left(\frac{1}{T+273} - \frac{1}{25+273}\right)}$$

Consequently, temperature T (in °C) can be calculated from resistance value R using the formula:

$$T = \left[\frac{1}{B} * \ln\left(\frac{R_{(T)}}{R_{25}}\right) + \frac{1}{25+273}\right]^{-1} - 273$$

The dot activation compensation time (about -1% per degree, starting from 25°C) is defined as follows:

$$T_{on} = T_{on(25°C)} * \left(1 - \frac{T-25}{100}\right)$$

$T_{on(25°C)}$ is given in section 0.

3.9 PRINT POSITION OF THE DATA

See mechanical drawing in appendix for the actual position of the first bit of print data.

3.10 OPERATING PRECAUTIONS

1. When performing continuous printing, the supply energy should be reduced so that the substrate temperature, monitored through the thermistor, will remain below 65°C.
2. All strobes signals must be disabled during the power and logic voltage on/off sequence.
3. Do not touch the connector pins with naked hands.
4. The print-head substrate surface is coated with glass, for this reason, mechanical stresses, shocks, dust and scratches should be avoided to prevent damage.
5. When the print-head operation is completed, print supply voltage (including the charged voltage with capacitor) should be reduced to the ground level and maintained until next print-head operation.
6. Avoid condensation, if condensation occurs, do not switch on the print-head power, until condensation has disappeared.
7. When plugging in and out of the FFC, avoid using excess force as damage may result (Plug in-out cycle for one FFC should not exceed 20 times). Do not pick up the mechanism by the FFC.
8. Print quality would become degraded if paper or ink residue were stuck on the heat element area. In this case, clean the print-head with an applicator and alcohol. Do not use the sandpaper as this will destroy the heating elements.
9. If sticking sound is heard while printing, please check and adjust the paper feed mechanism and the electrical pulse program to eliminate the sound.
10. Make sure the paper does not have high abrasion factor, low sensitivity or abnormal chemicals.
11. To avoid surges and voltage losses, VH and GND cable length should be less than 100 mm and minimum 47 µF aluminium capacitor between VH and GND is necessary on customer's controller board side.

Important precautions

To prevent any dot element damage:

At power up make sure that logic voltage (Vdd) is present simultaneously or before VH.

At power down make sure that VH is at 0 V before removing logic voltage.

4. PAPER FEED STEPPER MOTOR TIMING

The paper feed pitch for stepper motor is 1 step for one dot-line (0.125 mm). For good print quality it is advised to keep the current into the windings between two successive dot-lines. The timing diagram is then as follows:

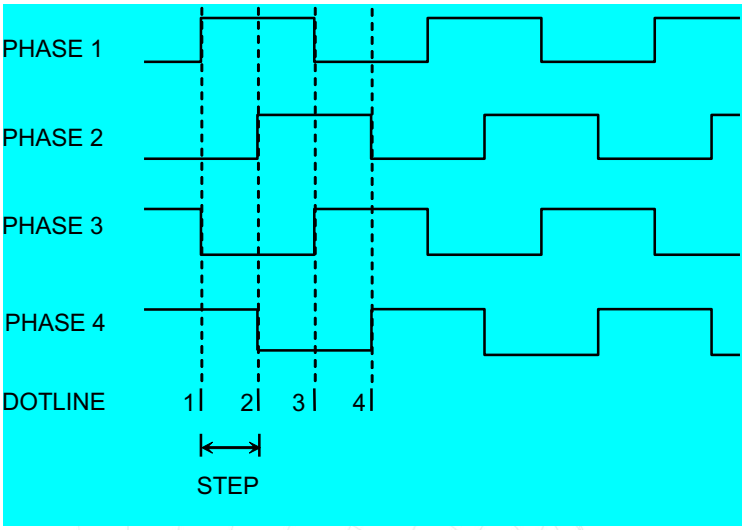

There are four different configurations for stepper motor windings. Stepper motor driving is bipolar and can be achieved with dedicated circuits. It is strongly recommended to use a stepper motor driver with current regulation such as Allegro A3983SLP-T. Please refer to the IC's data sheet for further information.

Stepper motor coil resistance is **13 Ω for HSP2208 and 3 Ω for HSP2128**
Recommended current is 450 mA for HSP2208 and 800 mA for HSP2128

In case of high voltage or continuous printing application, contact APS for current application circuitry.

Depending on working conditions, at a negative temperature additional software and hardware precautions must be impose.

5. INTEGRATED CUTTER

5.1 CUTTER STEPPER MOTOR

Timing diagram of the cutter stepper motor depends on the direction of movement of the blade.

Following diagram shows sequence to use to move the blade in the forward or cutting direction (blade going out of the mechanism):

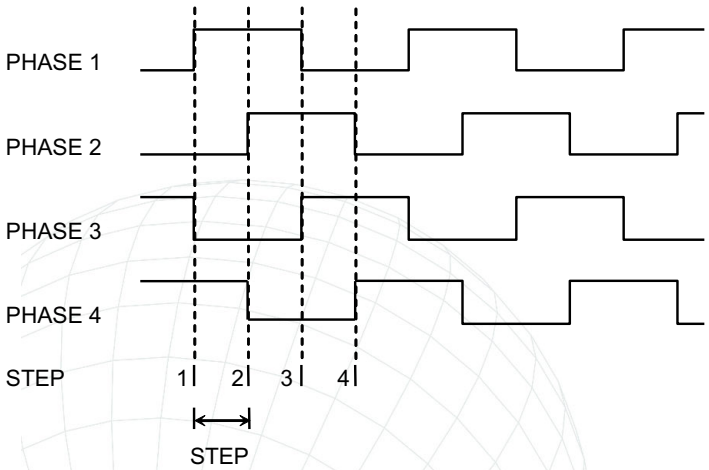

Following diagram shows sequence to use to move the blade in the reverse or parking direction (blade going back into the mechanism):

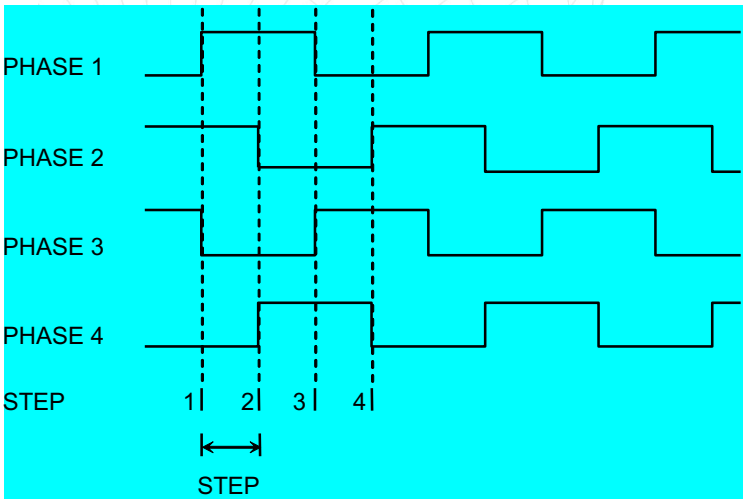

There are four different configurations for stepper motor windings. Proper sequence must be used to achieve movement of the blade in forward or reverse direction.

Stepper motor driving is bipolar and can be achieved with dedicated circuits. It is strongly recommended to use a stepper motor driver with current regulation such as Allegro A3983SLP-T. Please refer to the IC's data sheet for further information.

Stepper motor coil resistance is **13 Ω for HSP2208 and 3 Ω for HSP2128**
Recommended current is 1400 mA for HSP2208 and 1300 mA for HSP2128

5.2 BLADE POSITION SENSOR

A switch is used to detect home position of the blade.
One pole of the switch is internally tied to ground. The other pole should be pulled up via a 10K resistor.

One possible interfacing of the blade position sensor is shown in figure below.

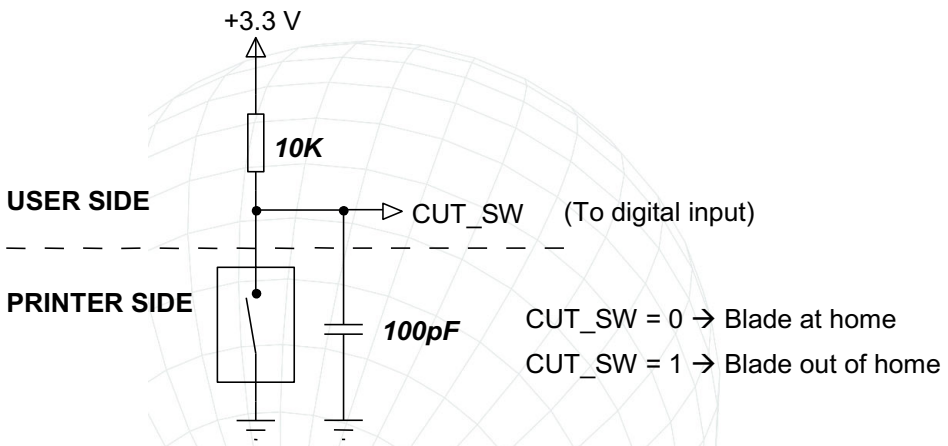

5.3 CUTTER RESET

After power-up the cutter blade is at an unknown position.
A reset sequence must be performed to ensure that the blade is parked in the cutter mechanism at a known home position.

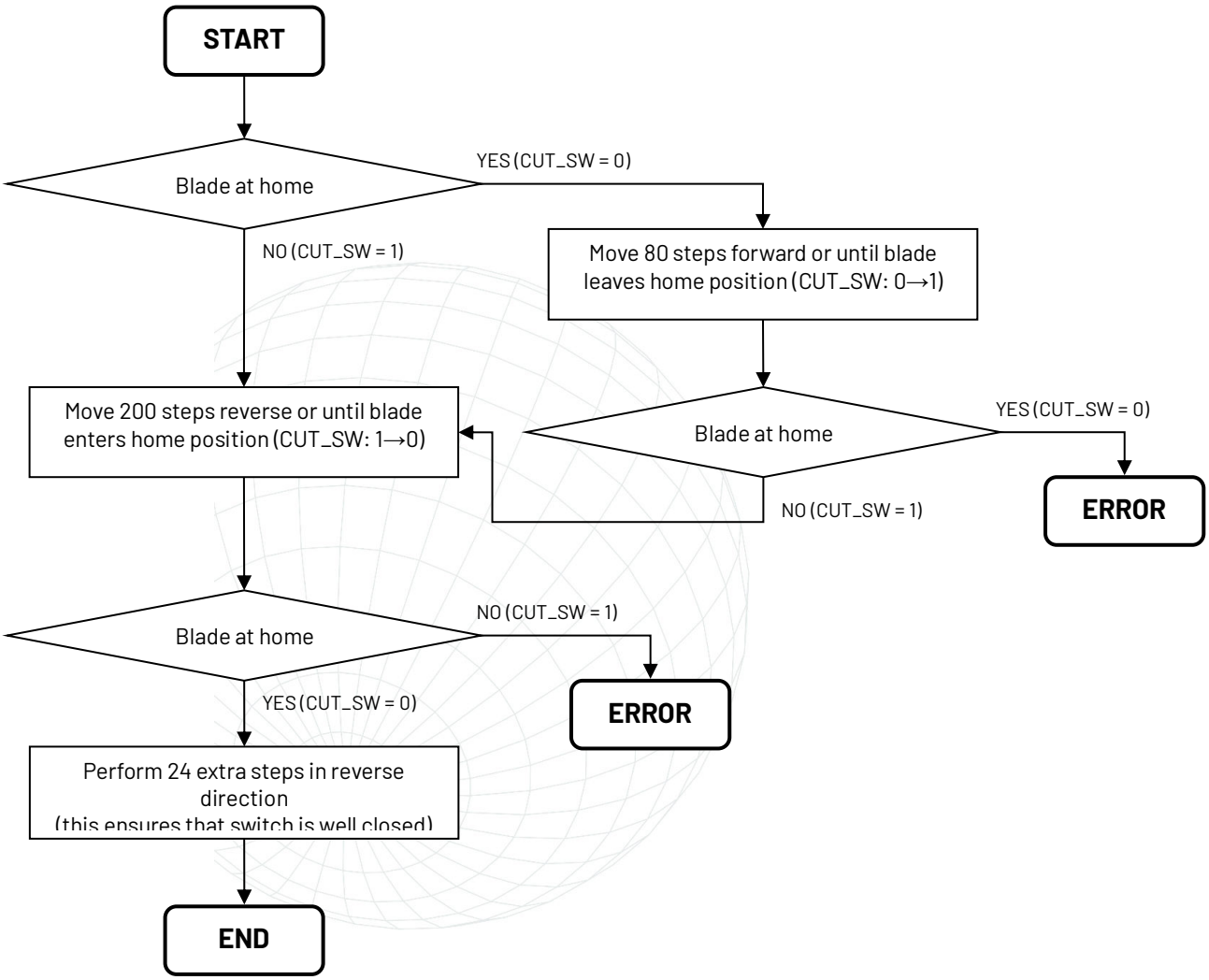

Important notes:

- Cutter switch must be checked **at the beginning of each motor step**
- Use raw state of the cutter switch **without any denounce filter** to ensure lowest latency of operation
- The flowchart is designed to cope with glitches of the mechanical switch

5.4 PAPER JAM DETECTION

One of the advantages of using a stepper motor to move cutter blade is the ability to reliably detect paper jam condition.

A blade distance counter should be updated by the host software during execution of the speed profile for this purpose. This counter is reset when the cutter blade leaves home position. This counter is incremented each time the software performs a step in the forward direction, and decremented each time the software performs a step in the reverse direction. Eventually, this counter is evaluated at the end of the speed profile to check for paper jam condition.

The following diagram shows an example of successful cut.
At the end of the cut, blade distance counter ($d_{FWD} - d_{REV}$) is zero or less than 40 steps (mechanical play).

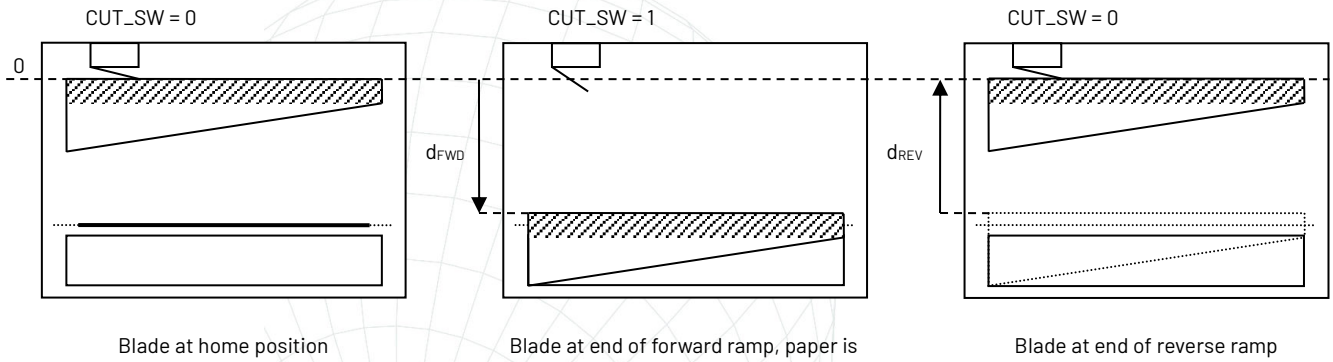

The following diagram shows an example of cut with paper jam.
During forward ramp, the software performed a total of d_{FWD} steps; however the blade actually moved only d_{FWD} (real) steps. At this point, the software has no way of knowing that the blade jammed. During reverse ramp, the software records that $d_{REV} = d_{FWD}$ (real) steps are needed to move the blade back to home position.

At the end of the cut, the blade distance counter is $[d_{FWD} - d_{REV}] = [d_{FWD} - d_{FWD}(real)] > 40$ steps, hence indicating a paper jam condition.

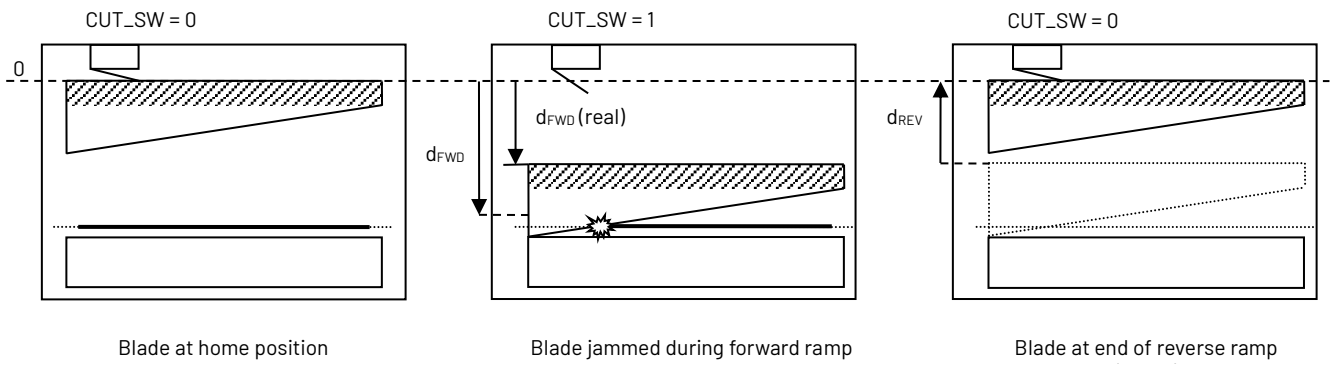

5.5 CUT SEQUENCE

The following flowchart is used to execute a full or partial cut profile (see next section for recommended speed profiles). **Please review important notes of cutter switch section and apply the same rules here.**

The cut sequence is divided in three parts:

1. Synchronization of blade distance counter when blade leaves home position
2. Forward speed ramp execution
3. Reverse speed ramp execution

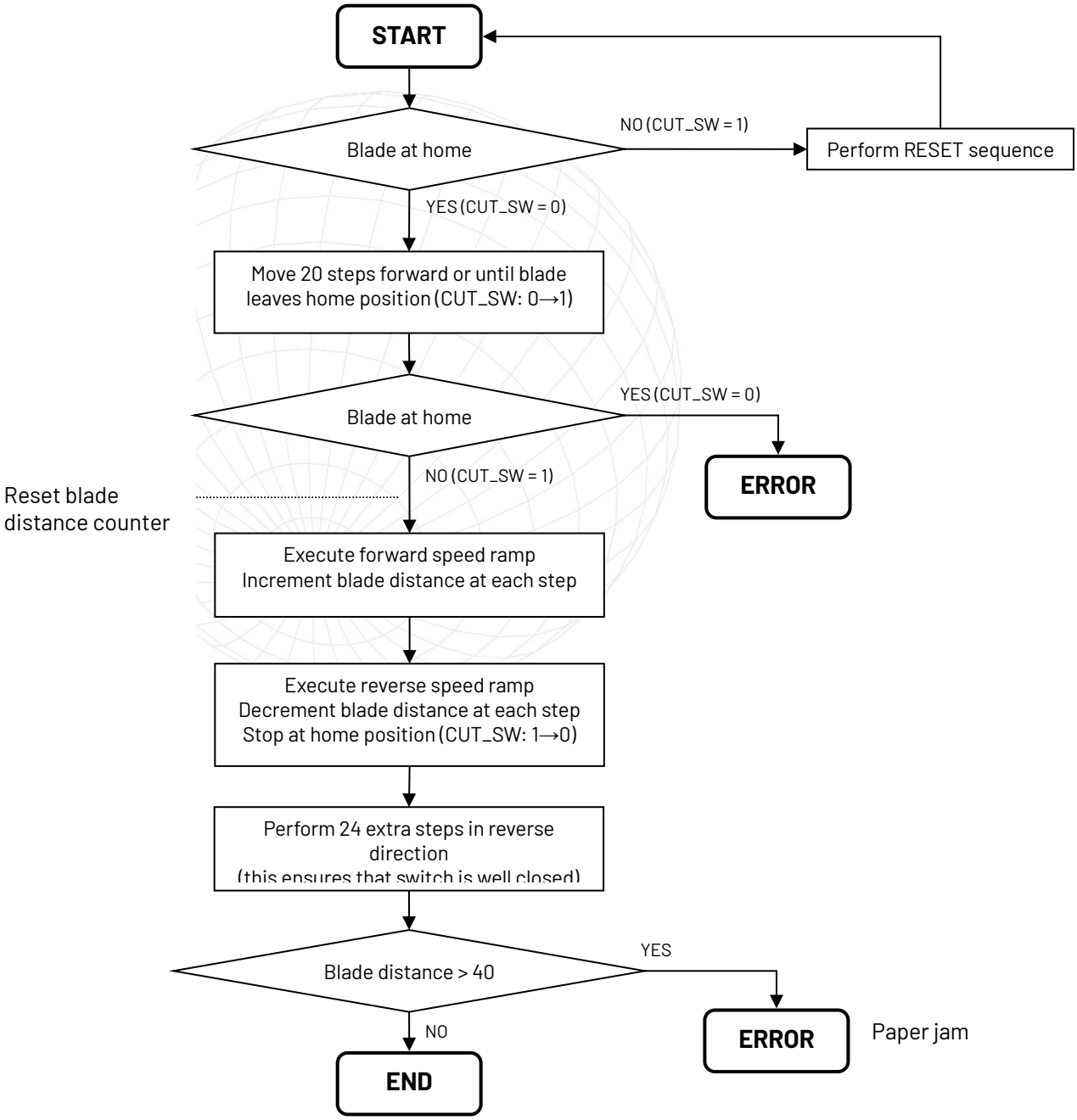

5.6 RECOMMENDED SPEED PROFILES

APS recommends the following speed profiles for full and partial cuts.
Two sets of profiles are presented, depending on paper thickness.

The following profiles should be used when cutting thick paper (100 – 220µm).

For HSP2208:

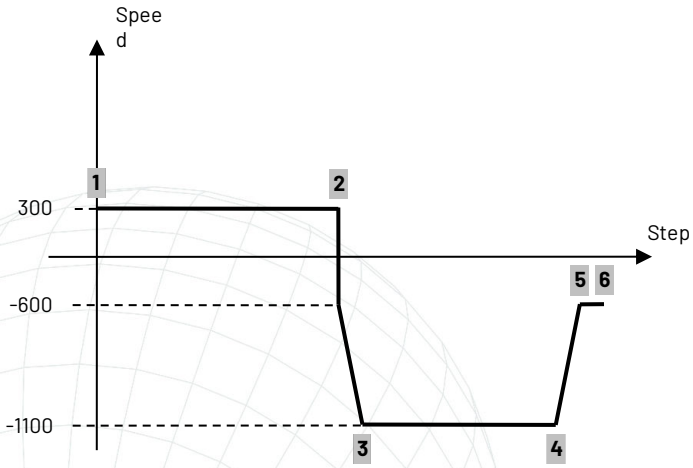

The same speed profile should be used for both full and partial cuts.
The only difference between full and partial cuts is the amplitude of the blade movement.
The following table shows the step number corresponding to each reference point in the diagram.

Point	Full cut step	Partial cut step	Ramp
1	0	0	Forward Speed Ramp
2	250	185	
3	250	185	Reverse Speed Ramp
4	270	205	
5	480	280	
6	500	370	

The following profiles should be used when cutting thin paper (< 100µm).

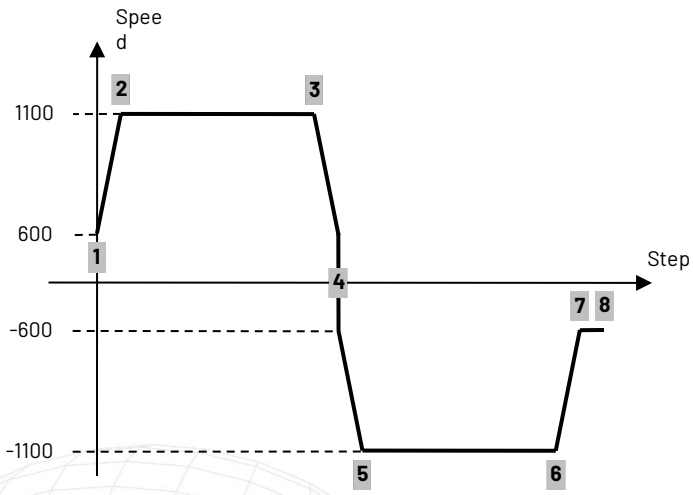

The same speed profile should be used for both full and partial cuts.
The only difference between full and partial cuts is the amplitude of the blade movement.
The following table shows the step number corresponding to each reference point in the diagram.

Point	Full cut step	Partial cut step	Ramp
1	0	0	Forward Speed Ramp
2	20	20	
3	230	165	
4	250	185	
5	250	185	Reverse Speed Ramp
6	270	205	
7	480	280	
8	500	370	

For HSP2128:

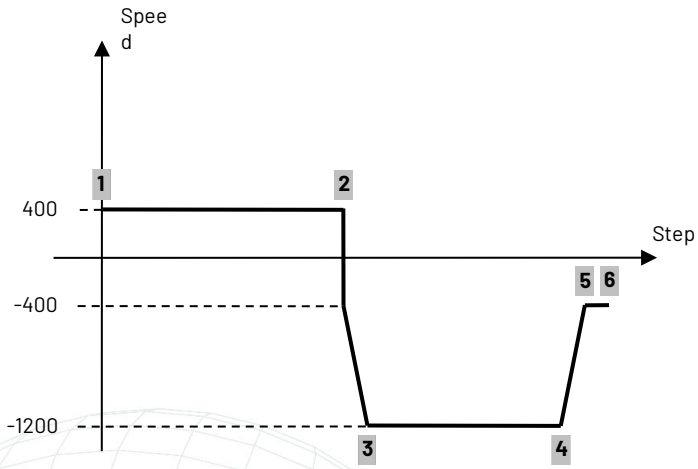

The same speed profile should be used for both full and partial cuts.
The only difference between full and partial cuts is the amplitude of the blade movement.
The following table shows the step number corresponding to each reference point in the diagram.

Point	Full cut step	Partial cut step	Ramp
1	0	0	Forward Speed Ramp
2	151	123	
3	171	152	Reverse Speed Ramp
4	282	244	
5	302	264	
6	322	284	

The following profiles should be used when cutting thin paper (< 100µm).

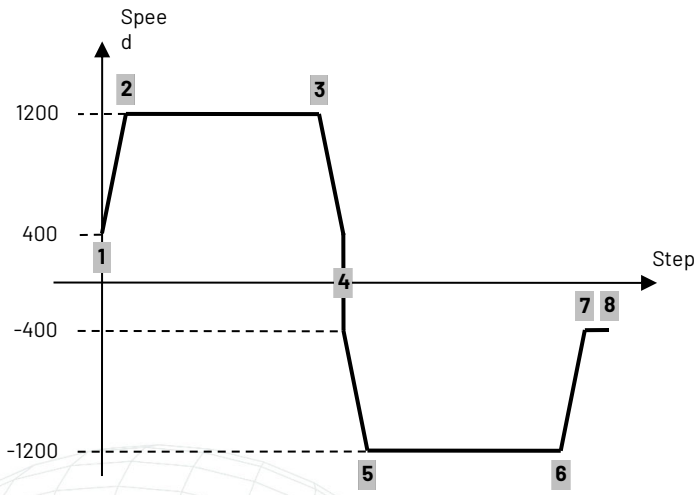

The same speed profile should be used for both full and partial cuts.
The only difference between full and partial cuts is the amplitude of the blade movement.
The following table shows the step number corresponding to each reference point in the diagram.

Point	Full cut step	Partial cut step	Ramp
1	0	0	Forward Speed Ramp
2	20	20	
3	131	112	
4	151	123	
5	171	152	Reverse Speed Ramp
6	282	244	
7	302	264	
8	322	284	

Recommendations:
When using partial cut, in order to keep the same uncut sector around 3mm, it is recommended to use paper with maximum width allowed (62,5 mm).
When using paper with less width than the maximum allowed, it is recommended paper to be aligned to the right.
Make sure that the paper follows a stable trajectory and doesn't wobble too much in X direction /along the print line/ in order to maintain a relatively repeatable partial cut performance.

6. SENSORS

6.1 DOOR OPEN

A switch is used to detect the opening of the door.
One pole of the switch is internally tied to ground. The other pole should be pulled up via a 10K resistor.

One possible interfacing of the door open sensor is shown in figure below.

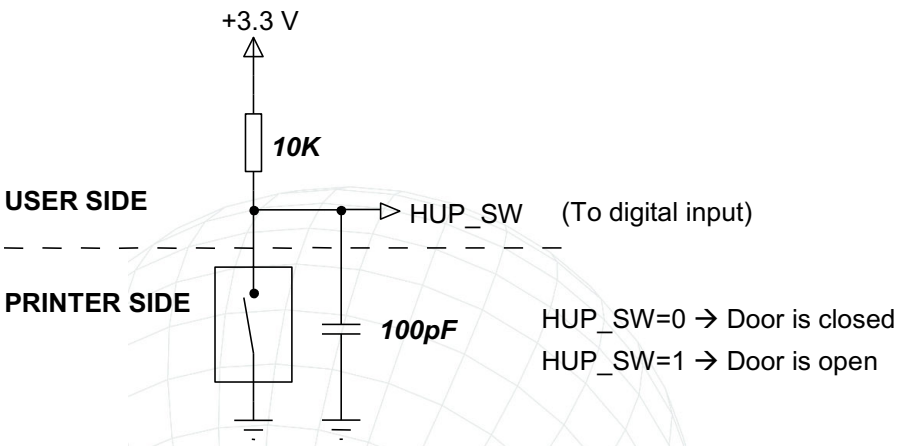

6.2 END OF PAPER

HSP 2208 / 2128 has an end of paper sensor achieved by a photo-transistor. Arrange the circuitry so that no energy is applied to the head when there is no paper. If the head is energized when there is no paper and the head is in the down position, then both roller and head may be strongly damaged.

The table below contains opto sensor specification.

Item	Symbol	Conditions	Min.	Typ.	Max.	Unit
Forward voltage (photodiode)	V_F	I_F = 10 mA	-	-	1.3	V
Reverse current	I_R	V_R = 5 V	-	-	10	µA
Output dark current	I_{CEO}	V_{CE} = 10 V	-	-	0.2	µA
Light current	I_L	V_{CE} = 5 V I_F = 10 mA	90	-	-	µA
Rise Time	T_R	V_{CE} = 2 V I_C = 100 µA R_L = 10 KΩ	-	200	-	µs
Fall time	T_F	R_L = 10 KΩ	-	150	-	µs

One possible interfacing of the opto sensor circuit is shown in figure below.

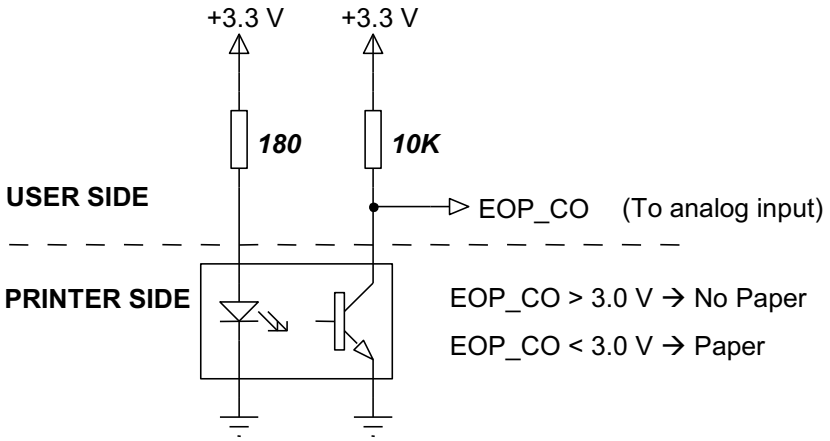
+3.3 V
+3.3 V
180
10K
USER SIDE
EOP_CO
(To analog input)
PRINTER SIDE
EOP_CO > 3.0 V → No Paper
EOP_CO < 3.0 V → Paper

7. MECHANISM INTERCONNECTION

7.1 PIN OUT ASSIGNMENT

Printer interconnection is done through 2 customer-provided Flat Flexible Cables (FFC). One cable is connected directly to the TPH, the other carries stepper motors phases and small signals.
This design allows customer to connect **HSP2208 / 2128** very easily and at very low cost whatever the mechanical integration constraints are.

TPH connector: FPC1.25E-WT-28P (1.25 mm FFC pitch) or equivalent.

Pin	Signal	Direction	Description
1	VH	Power	Head power voltage
2	VH	Power	Head power voltage
3	VH	Power	Head power voltage
4	VH	Power	Head power voltage
5	DO1	Output	TPH shift register 1 data out (dots 193 to 448)
6	DI1	Input	TPH shift register 1 data in (dots 193 to 448)
7	GND	Ground	Power/logic ground
8	GND	Ground	Power/logic ground
9	GND	Ground	Power/logic ground
10	GND	Ground	Power/logic ground
11	GND	Ground	Power/logic ground
12	STB1	Input	TPH strobe (dots 193 to 448)
13	CLK	Input	TPH shift registers clock
14	/LAT	Input	TPH shift registers latch
15	VDD	Power	Logic power voltage
16	TM	N/A	Thermistor pole
17	TM	N/A	Thermistor pole
18	STB2	Input	TPH strobe (dots 1 to 192)
19	GND	Ground	Power/logic ground
20	GND	Ground	Power/logic ground
21	GND	Ground	Power/logic ground
22	GND	Ground	Power/logic ground
23	DO2	Output	TPH shift register 2 data out (dots 1 to 192)
24	DI2	Input	TPH shift register 2 data in (dots 1 to 192)
25	VH	Power	Head power voltage
26	VH	Power	Head power voltage
27	VH	Power	Head power voltage
28	VH	Power	Head power voltage

Note: it is possible to chain TPH shift registers 1 and 2 to use get a single input / single output shift register 448 dots wide. For this configuration, connect DO2 and DI1 signals externally and use DI2 as shift register data input, DO1 as shift register data output.

Motors/small signals (sensors) connector: Molex 52044-2045 (1.25 mm FFC pitch) or equivalent.

Pin	Signal	Direction	Description
1	CUT4	N/A	Cutter stepper motor phase 4
2	CUT3	N/A	Cutter stepper motor phase 3
3	CUT2	N/A	Cutter stepper motor phase 2
4	CUT1	N/A	Cutter stepper motor phase 1
5	GND	Ground	Signals ground
6	GND	Ground	Signals ground
7	CUT_SW	Output	Cutter home switch (other pole tied to ground)
8	HUP_SW	Output	Head-up switch (other pole tied to ground)
9	GND	Ground	Signals ground
10	GND	Ground	Signals ground
11	SM1	N/A	Roller stepper motor phase 1
12	SM2	N/A	Roller stepper motor phase 2
13	SM3	N/A	Roller stepper motor phase 3
14	SM4	N/A	Roller stepper motor phase 4
15	GND	Ground	Signals ground
16	GND	Ground	Signals ground
17	EOP_VF	Input	End-of-paper opto LED anode
18	EOP_CO	Output	End-of-paper opto collector output
19	N/A	N/A	N/A
20	N/A	N/A	N/A

7.2 RECOMMENDED FFC DIMENSIONS

- Pitch : 1.25 mm
- Strip length (S): 5 mm (length of naked conductor pushed into the connector)
- Strip thickness (T): 0.3 mm (thickness of FFC pushed into the connector)
- Reinforcement length (F): 8 mm max.
- Conductor thickness: 50 µm
- Conductor width: 0.8 mm
- Max. FFC length: 500 mm max. (print quality may decrease with higher FFC length)

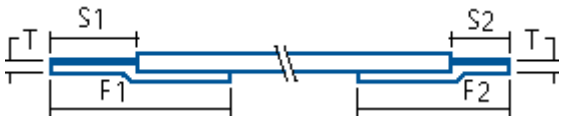

8. OPTIONAL DRIVER BOARD

APS developed a high performance driver boards to uncover the huge potential of the **HSP** printers.
These control boards are available as separate products.

8.1 GENERAL FEATURES

- **ESC/POS compatibility**
- **High-speed printing with historic control**
- **Windows and Linux drivers**
- **Wide operating temperature range**

8.2 CONTROL BOARD INTERFACES

- **Serial communication interface**
- **USB communication interface**
  Complies with the *Universal Serial Bus specification Rev. 2.0 (basic speed)*
- **Standard A.P.S near end-of-paper sensor interface**
- **Standard A.P.S keyboard interface**
  Online/offline switch, paper feed switch and status LED
- **Standard A.P.S extension connector**
  Can drive simple ejector module
- **Two pins connector for external 24V DC motor control**

8.3 CONTROL BOARD PRINTING ENGINE

- **Full control over printing quality/speed**
- **Powerful text printing modes**
- **Powerful graphic printing modes**
- **Page mode printing**
- **Macro support**
- **Bar code support**
  Support for UPC-A, UPC-E, EAN13, CODE39, ITF and CODABAR
- **Dedicated user non-volatile (NV) memory**
- **Two resident characters fonts, easy font upgrades**
  Font A is 12x24 pixels, font B is 9x17 pixels
  User fonts may be of any width and height
- **Easy firmware and font upgrades**

9. MECHANICAL & HOUSING

9.1 KIOSK VERSION AND EASY LOADING VERSION

HSP2208/2128 offers two possible configurations:

It can be a stand-alone mechanism for Kiosk applications. The platen roller support is fixed to the mechanism by the mean of the provided shaft. The lever allows customer to extract the platen roller support and thus easily clean the thermal head. This is "**Kiosk**" version.

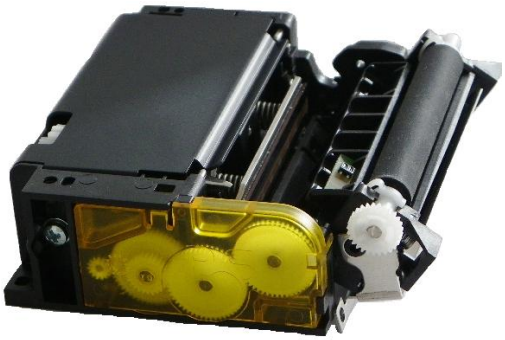

HSP2208/2128 can also be turned into a complete easy loading mechanism for Gaming applications. The platen roller support is independent from the mechanism and can be mounted on the door of the customer. This is the "**Easy Loading**" version.

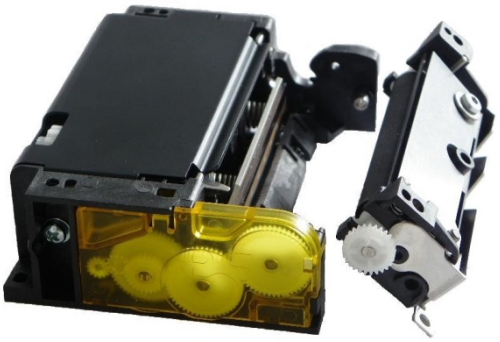

9.2 DESIGNING THE DOOR

The rubber roller easy loading module can be fixed on customer's door. The integrated opening lever can easily be dressed with customer's cosmetic part.
Pay attention to STRICTLY respect hinge's position recommendations as per attached drawing.

9.3 THE EASY DOOR OPENING SYSTEM

Because the rubber roller is only referenced to the chassis and has no dependence on the cover, the mechanism is very reliable. To achieve this reliability, the rubber roller assembly must be strongly locked inside the chassis.
To avoid any twist, and mechanical stress on the cover and more generally on the customer plastic, so increasing reliability and quality, APS developed a unique and patented feature to ease the opening of the door, that makes the mechanism very easy to open, and does not require any access to the cover's sides, giving more flexibility and ergonomics to the customer design.
This is achieved by using roller assembly's lever that pushes symmetrically on both sides of the rubber roller. So the mechanism's shape has been optimized to concentrate the effort locally and always refer this effort to the chassis.
Doing so there is no need to have access to the cover side, giving more freedom to design the cover, and allowing reducing the width of the unit.

9.4 OVERALL DIMENSIONS AND FIXING POINTS

See attached drawing or ask APS for additional mechanical details.

The printer has to be fixed using its own points as described on the overall dimensions drawing, avoid any kind of deformation or torsion or, if not, the print quality and printer's life will be drastically reduced.

10. GENERAL CLEANING

The HSP2208/2128 is a high reliability mechanism, which requires very low maintenance, but some cleaning should be performed as follows.

The environments where the printer is used, can increase the dust accumulation, and have a direct impact of the frequency of the cleaning. But in any case it's necessary to clean it periodically in order to maintain good print quality.

In case of pale printing, then it's important to clean the print head.

10.1 CLEANING INSTRUCTIONS:

- Switch off the printer and wait until the print head is cooled.
- Open the cover or the roller support and remove the paper.
- Don't touch the print head with the fingers, but clean the print head areas where there is dust accumulation.
- Close the roller support and reload the paper.

11. ORDERING CODE

PRODUCT NAME	ORDERING CODE
HSP2208-EL-LL High Speed Printer 2" 24V LinerLess	**90HSP222**
HSP2208-KS-LL High Speed Printer 2" 24V LinerLess	**90HSP223**

HSP2208-EL-LL NCOB PRT MECH 2" 24V LL	90HSP227A0000
HSP2128-EL-LL High Speed Printer 2" 24V LinerLess	(90HSP212)
HSP2128-KS-LL High Speed Printer 2" 24V LinerLess	(90HSP213)

12. APPLICATION NOTES

For further information for a better HSP2208 integration refer to APS document "APN HSP2208"

12.1 EXAMPLE OF INTEGRATION

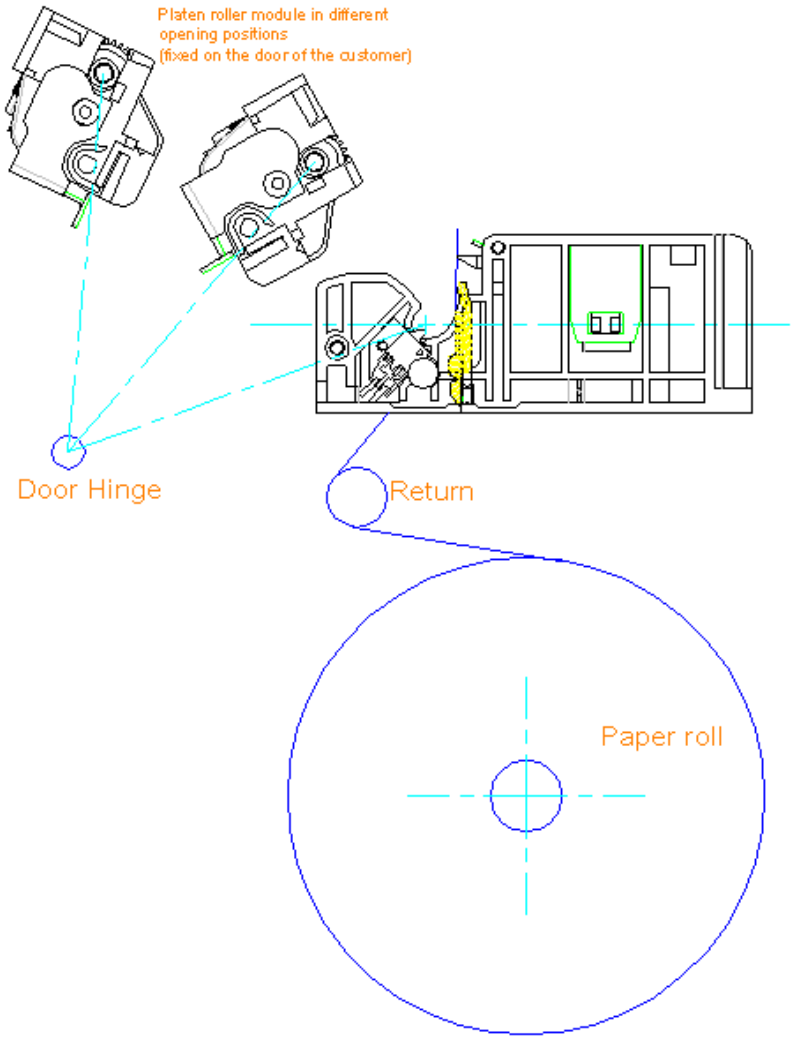

12.2 EASY LOADING MODULE

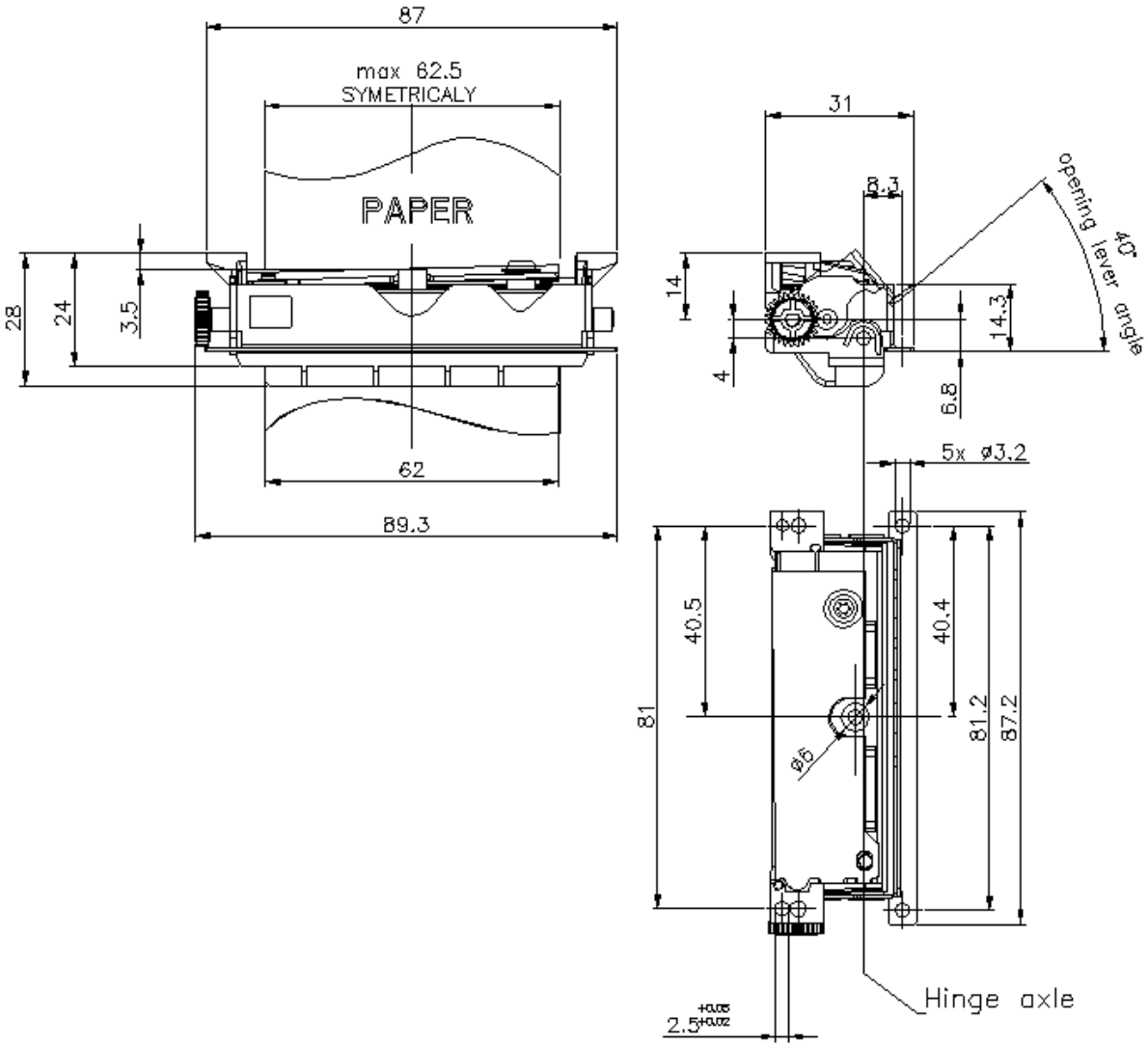

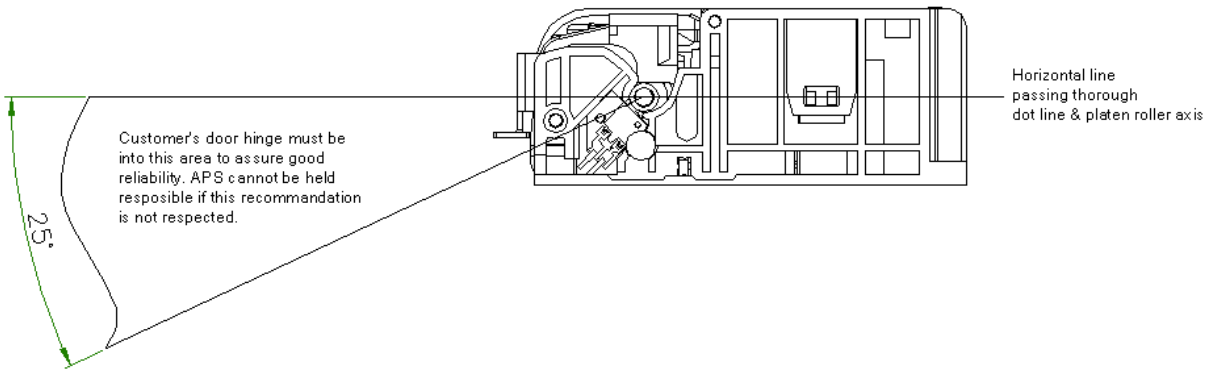
Horizontal line
passing thorough
dot line & platen roller axis
Customer's door hinge must be
into this area to assure good
reliability. APS cannot be held
resposible if this recommandation
is not respected.
25°

13.2. Easy loading module

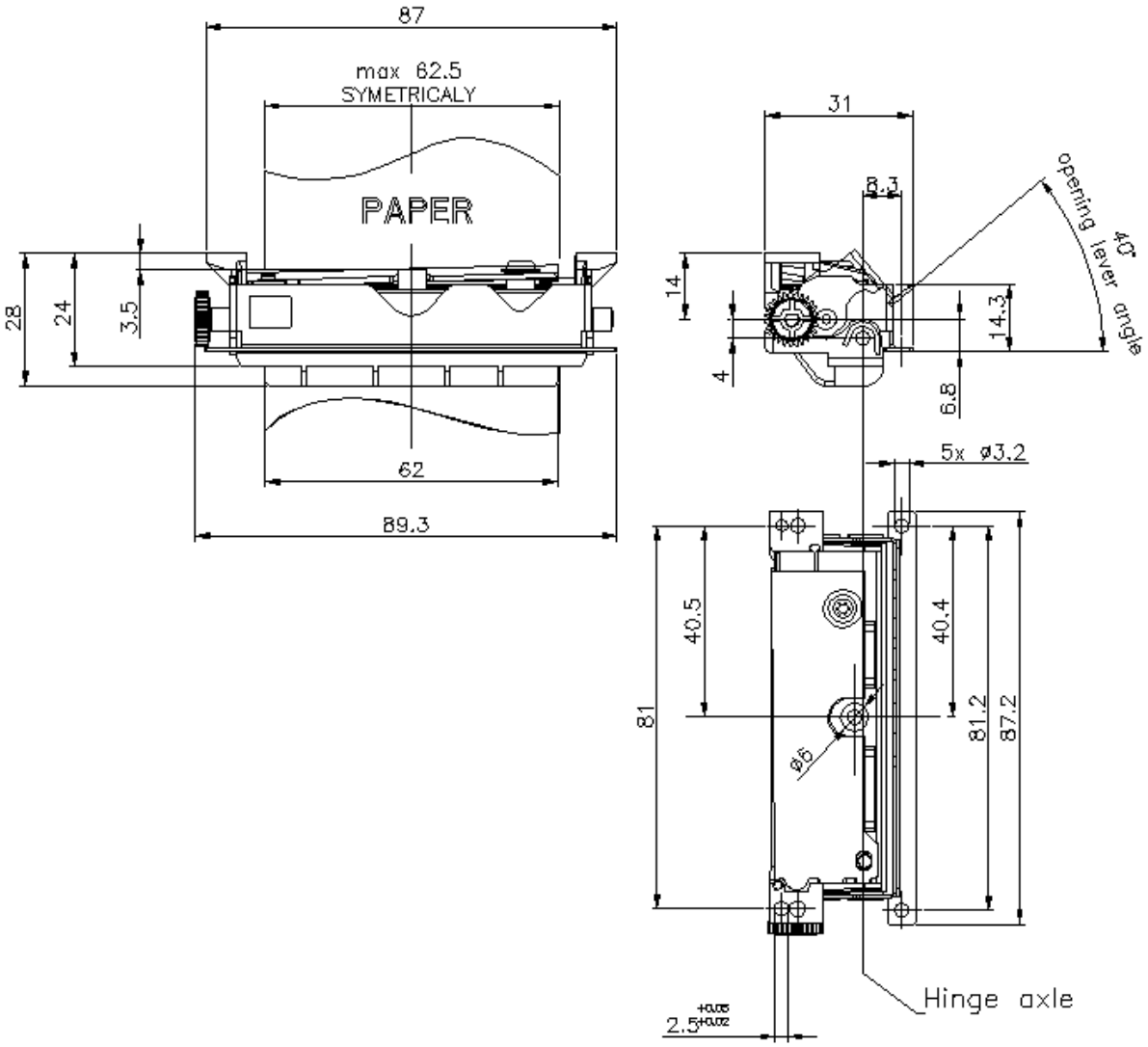

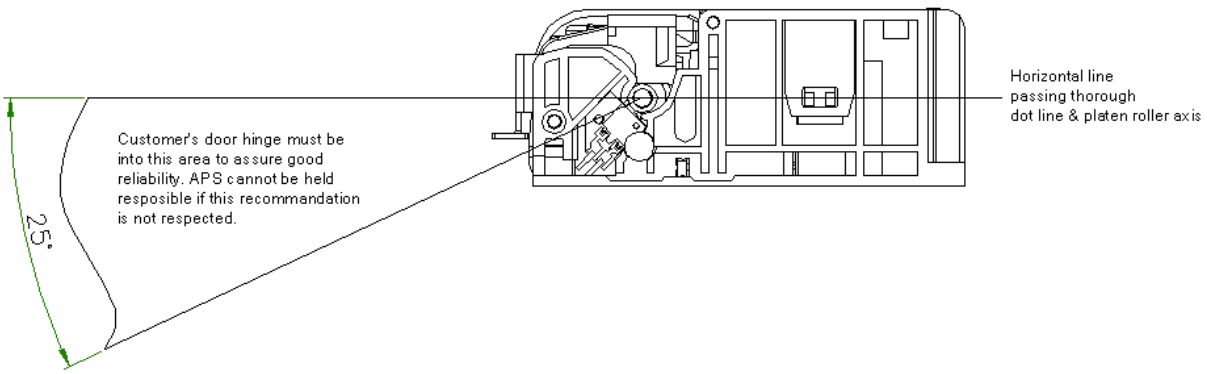

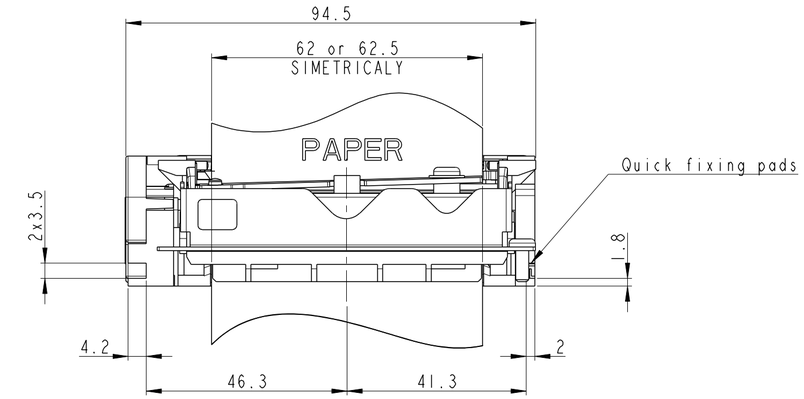

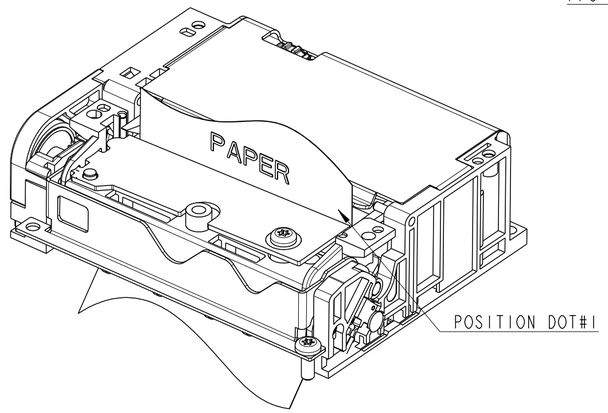

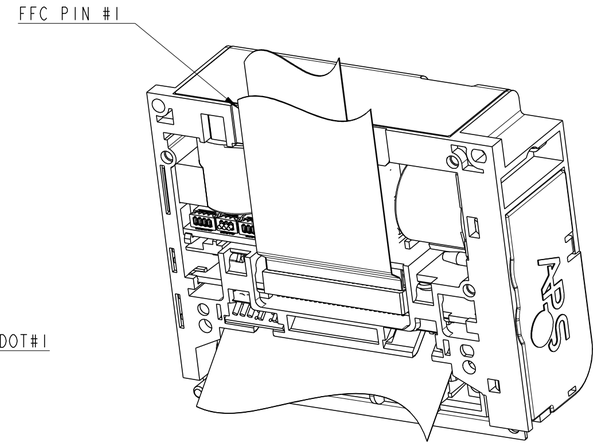

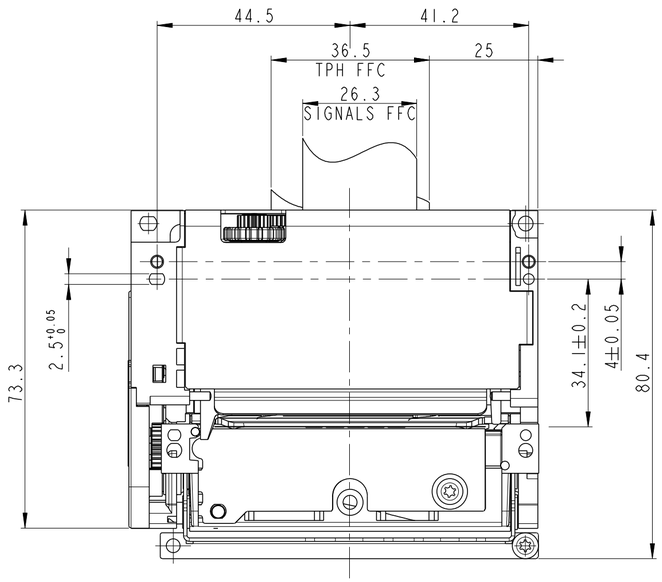

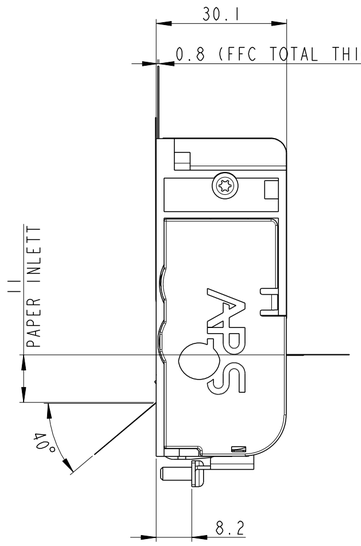

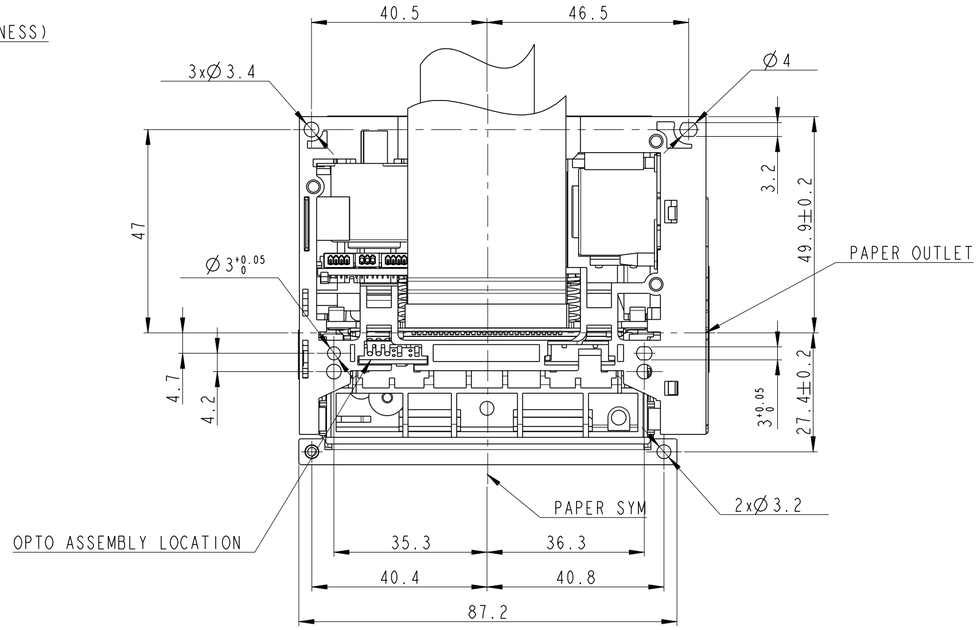

MASSA Mass	UNITA' unit	DISEGNATO DA Drawn by	VISTO DA Checked by	DATA Date	SCALA Scale
-	mm	LY	LY	16-NOV-2011	1:1

CARTELLA/Folder	DESCRIZIONE / Description	FOGLIO/Sheet	FORMATO-Size
HSP2208	OVERAL DIMENSION DRAWING	1	A2

DENOMINAZIONE/Denomination	N° DIS./Draw.No	REV.
HSP2208 EASY LOADING	90 200 106	A

REVISIONI (Revisions) : A: CREATION 16-NOV-2011

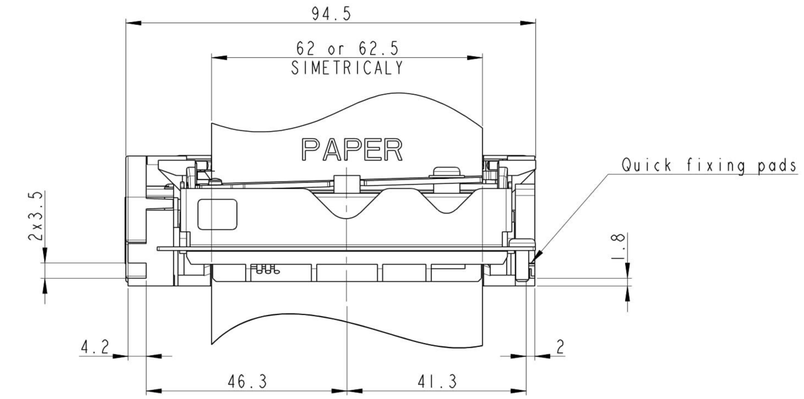

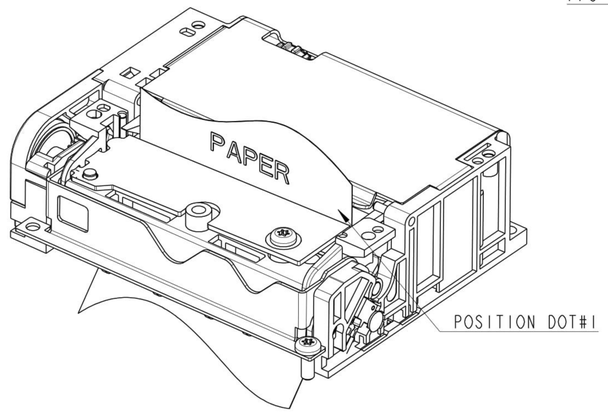

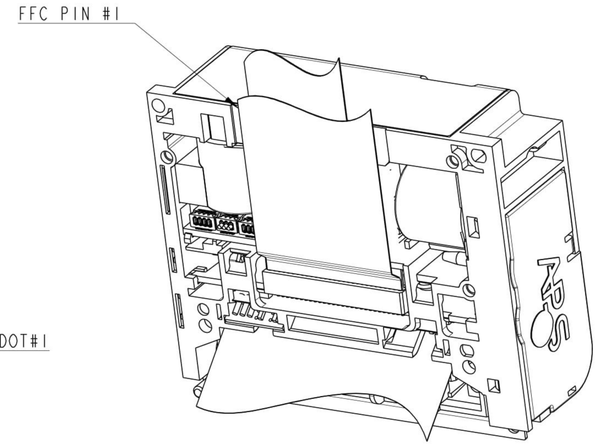

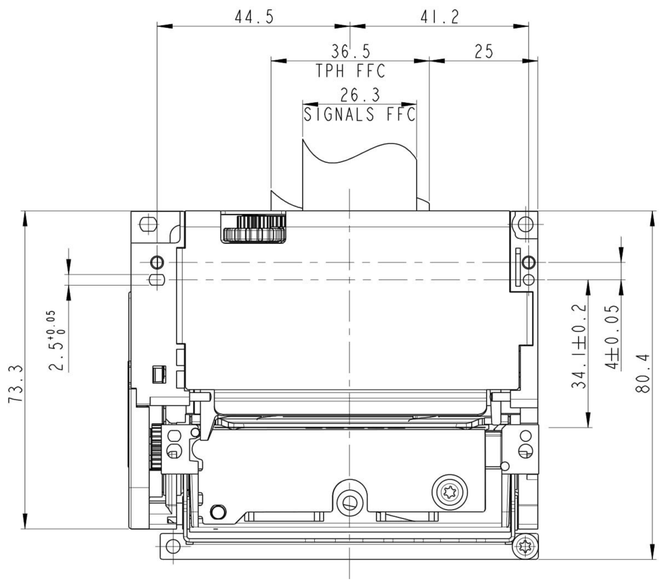

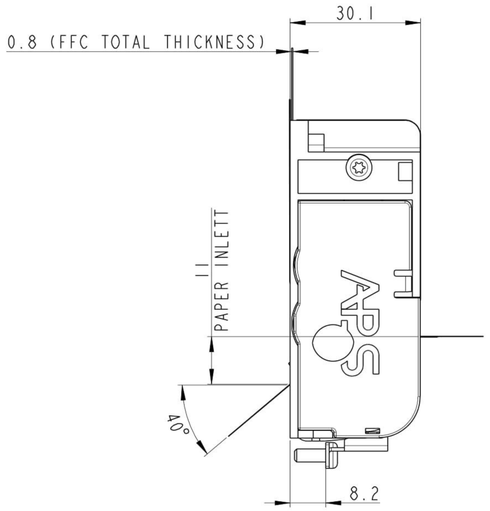

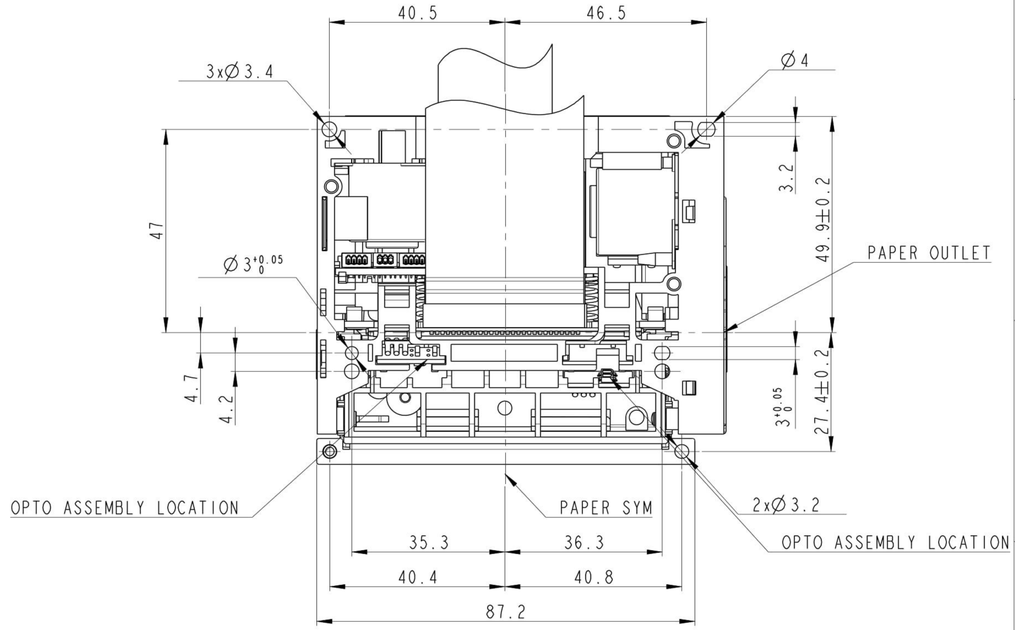

MASSA Mass	UNITA' unit	DISEGNATO DA Drawn by	VISTO DA Checked by	DATA Date	SCALA Scale
-	mm	LY	LY	16-NOV-2011	1:1

CARTELLA/Folder	DESCRIZIONE / Description	FOGLIO/Sheet	FORMATO-Size
HSP2500	OVERAL DIMENSION DRAWING	1	A2

DENOMINAZIONE/Denomination	N° DIS. /Draw. No.	REV.
HSP2208 KIOSK LEFT	90 HSP 225	A

REVISIONI (Revisions) : A: CREATION 16-NOV-2011

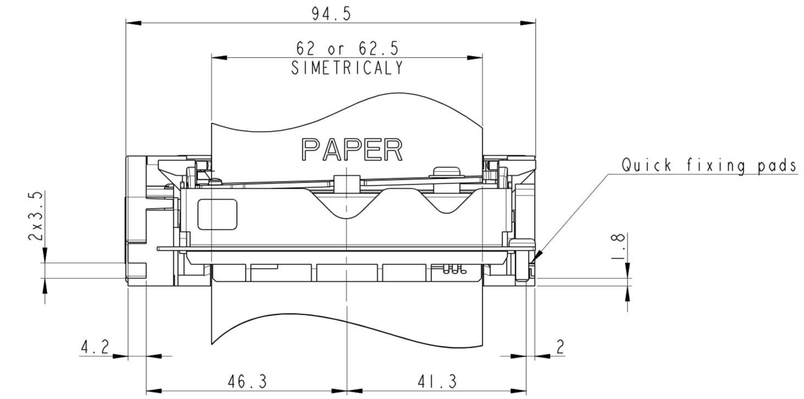

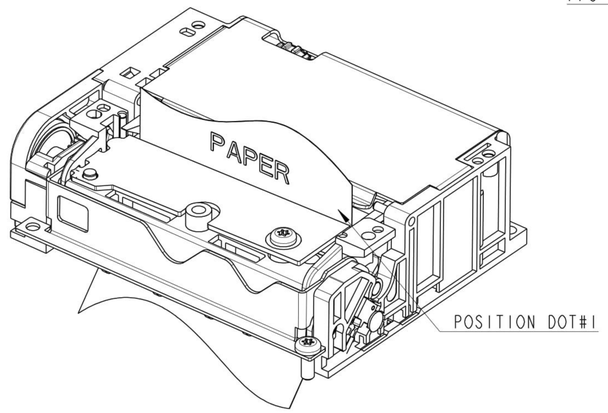

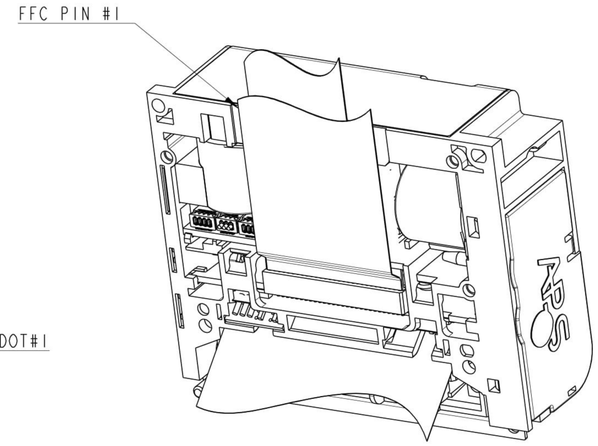

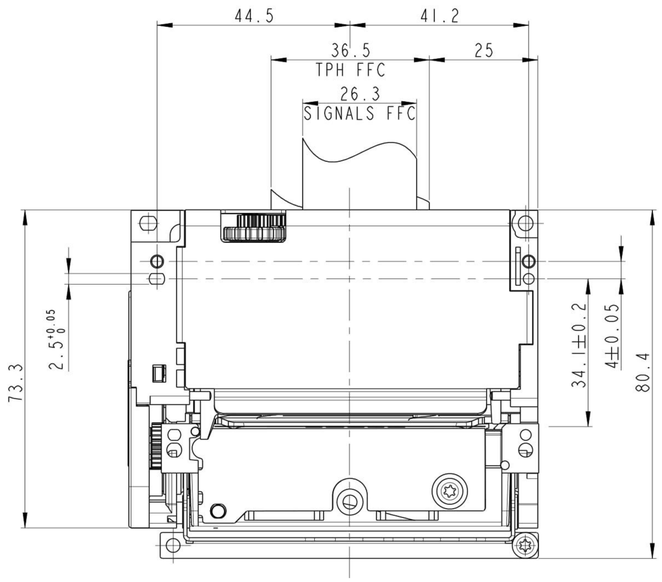

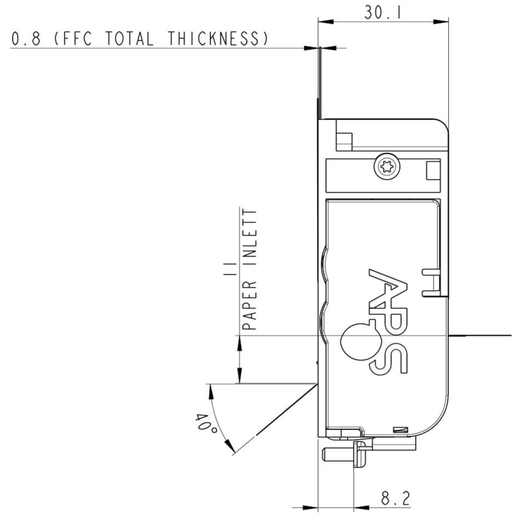

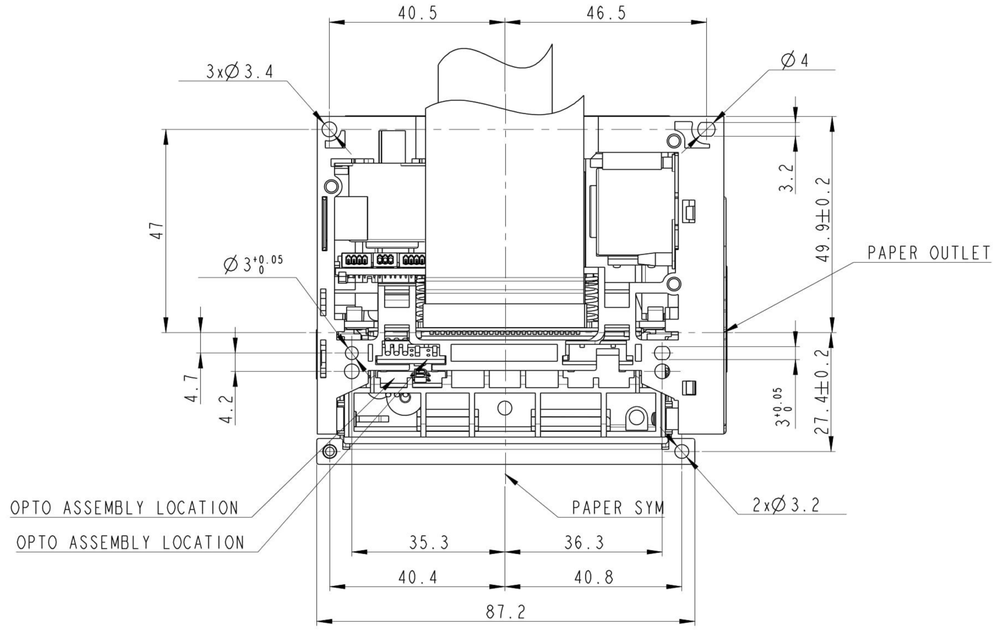

MASSA Mass	UNITA' unit	DISEGNATO DA Drawn by	VISTO DA Checked by	DATA Date	SCALA Scale
-	mm	LY	LY	16-NOV-2011	1:1

CARTELLA/Folder HSP2208	DESCRIZIONE / Description OVERAL DIMENSION DRAWING	FOGLIO/Sheet 1	FORMATO-Size A2
DENOMINAZIONE/Denomination HSP2208 KIOSK RIGHT		N° DIS. /Draw. No 90 HSP 226	REV. A

REVISIONI (Revisions) : A: CREATION 16-NOV-2011

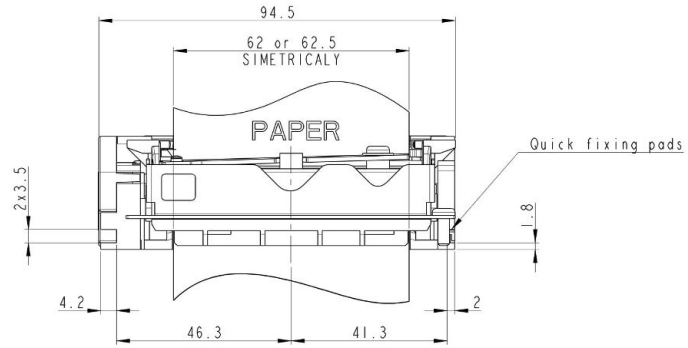

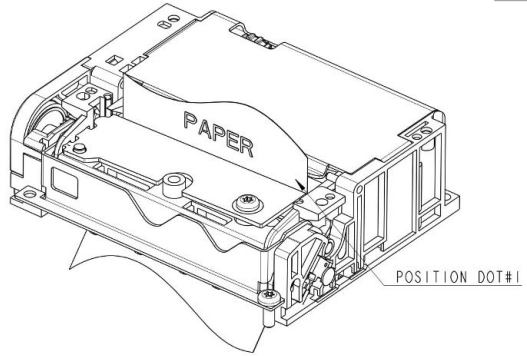

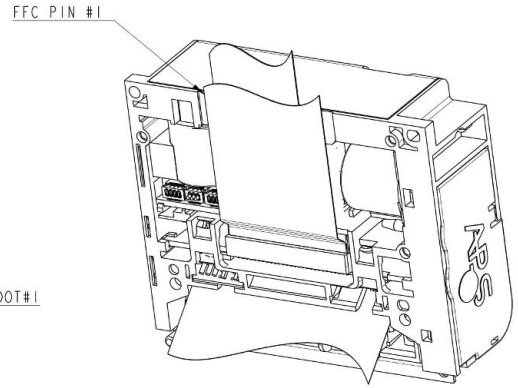

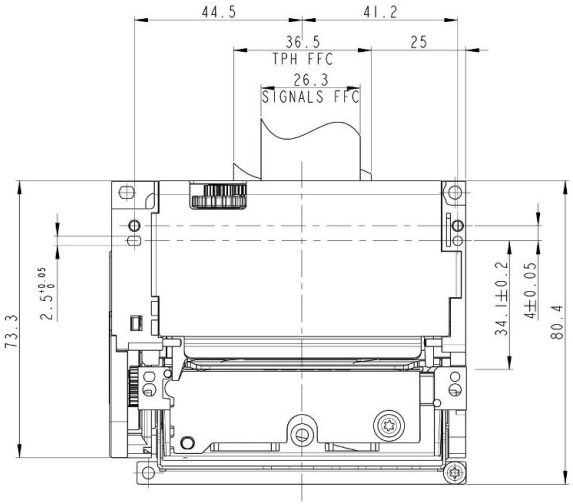

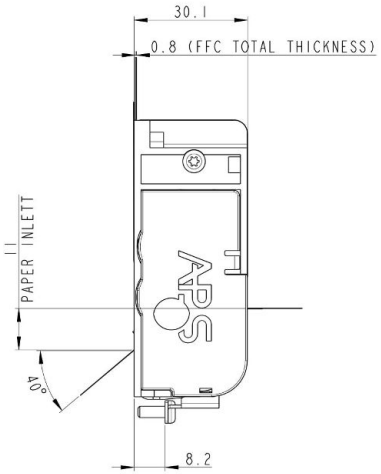

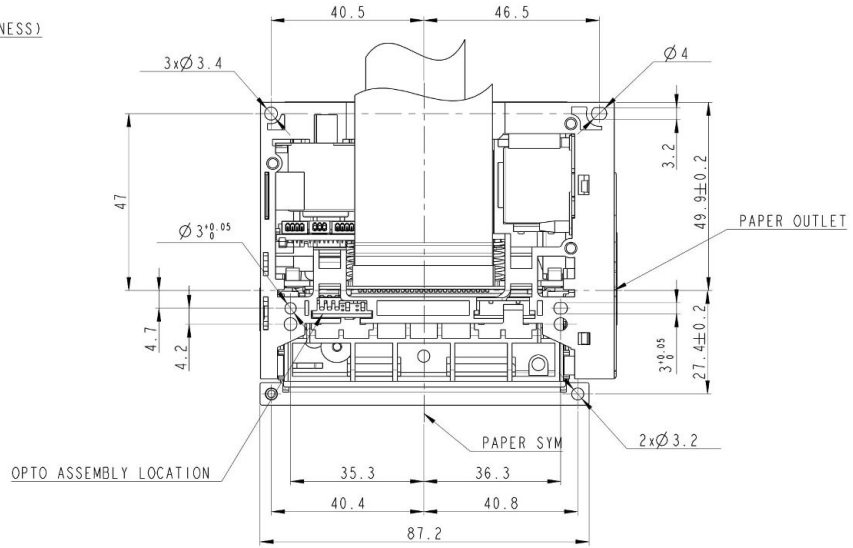

	MASSA Mass	UNITA' unit	DISEGNATO DA Drawn by	VISTO DA Checked by	DATA Date	SCALA Scale	
	-	mm	LY	LY	27-MAR-2012	1:1	APS
CARTELLA/Folder HSP2128	DESCRIZIONE / Description OVERAL DIMENSION DRAWING			FOGLIO/Sheet	1		FORMATO/Size A2
DENOMINAZIONE/Denomination HSP2128 EASY LOADING				N° DIS. /Draw. No 90 740 019			REV. A

REVISIONI (Revisions) : A: CREATION (27-MAR-2012)

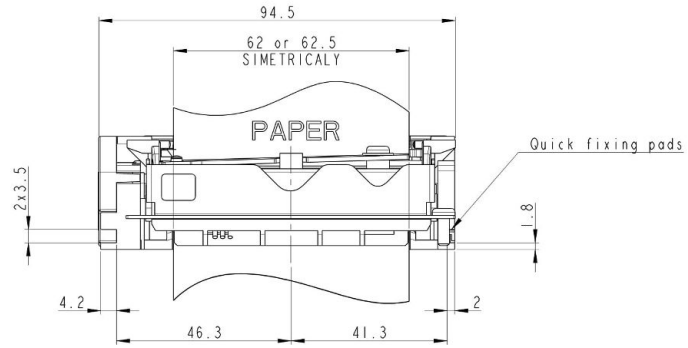

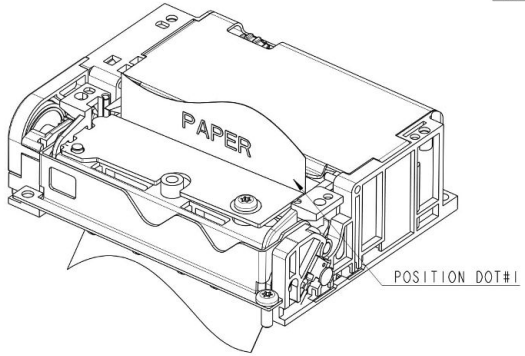

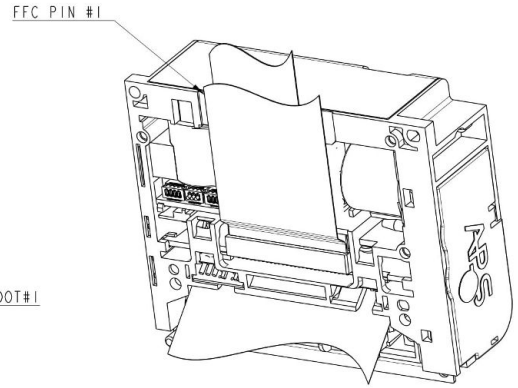

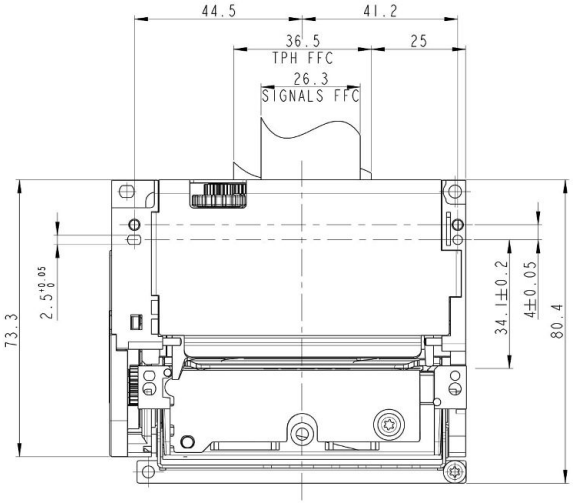

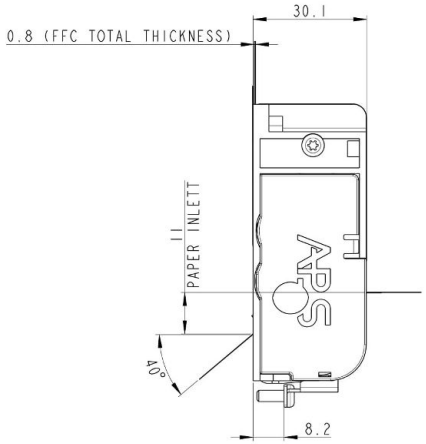

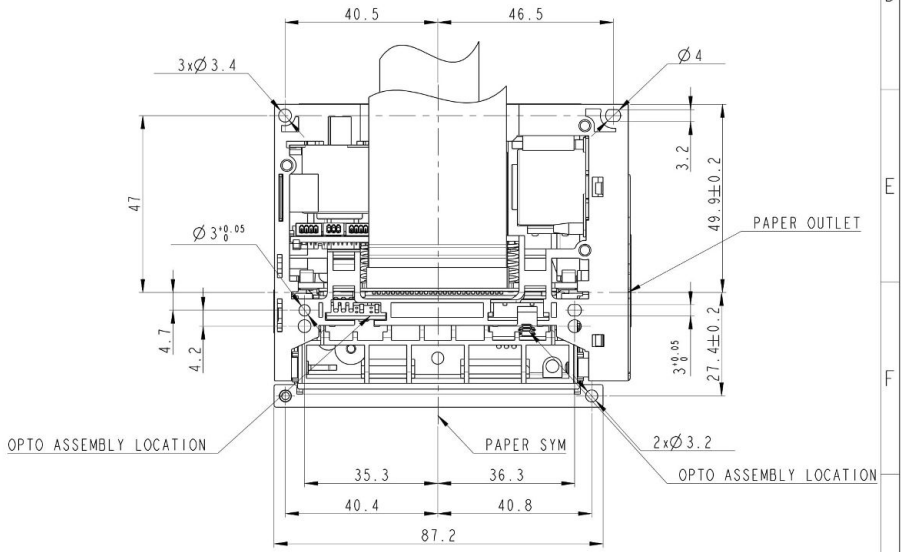

MASSA Mass	UNITA' unit	DISEGNATO DA Drawn by	VISTO DA Checked by	DATA Date	SCALA Scale	
-	mm	LY	LY	27-MAR-2012	1:1	APS
CARTELLA/Folder HSP2128	DESCRIZIONE / Description OVERAL DIMENSION DRAWING		FOGLIO/Sheet	1	FORMATO/Size A2	
DENOMINAZIONE/Denomination HSP2128 KIOSK LEFT			N° DIS./Draw.No 90 HSP 210		REV. A	

REVISIONI (Revisions) : A: CREATION (27-MAR-2012)